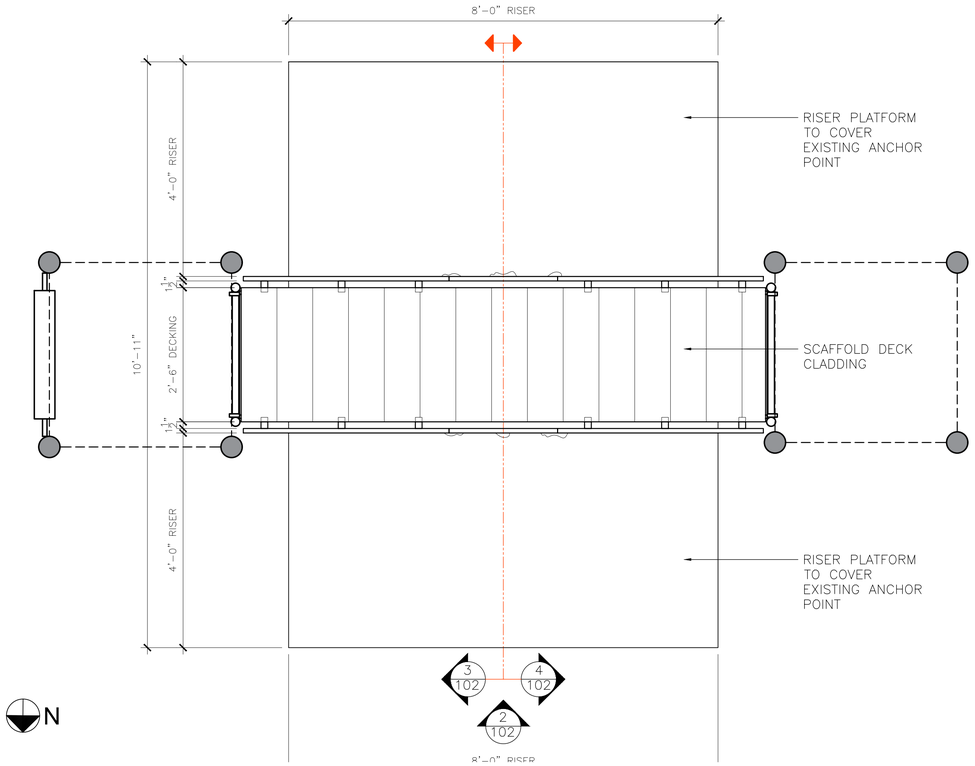

1 102 PLAYGROUND BUILD PLAN
SCALE: 3/4" = 1'-0"

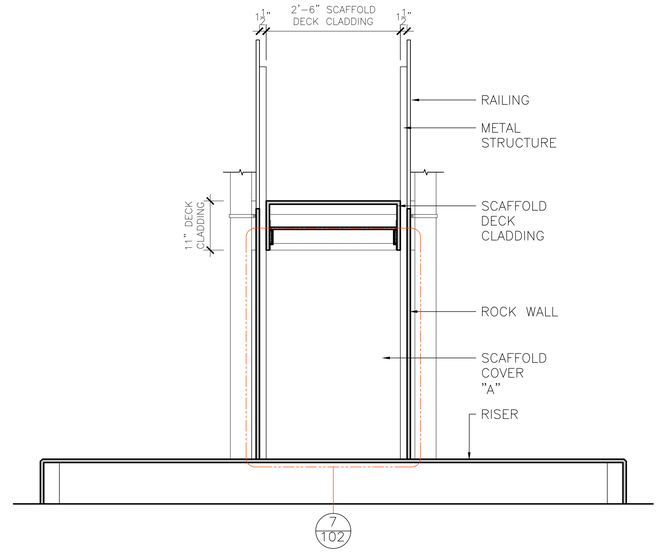

3 102 PLAYGROUND BUILD SECTION
SCALE: 3/4" = 1'-0"

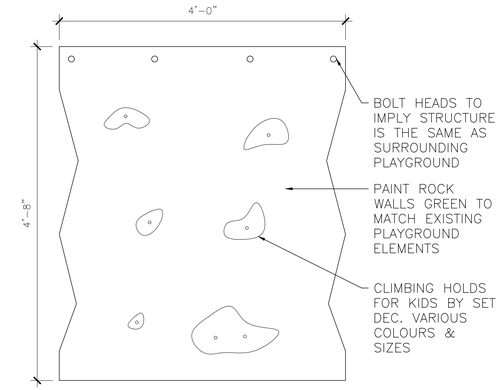

5 102 ROCK WALL DETAIL
SCALE: 1" = 1'-0"

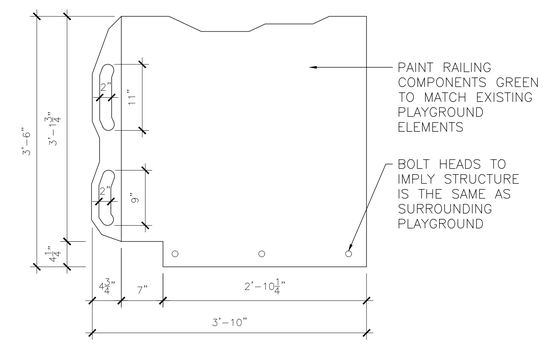

6 102 RAILING DETAIL
SCALE: 1" = 1'-0"

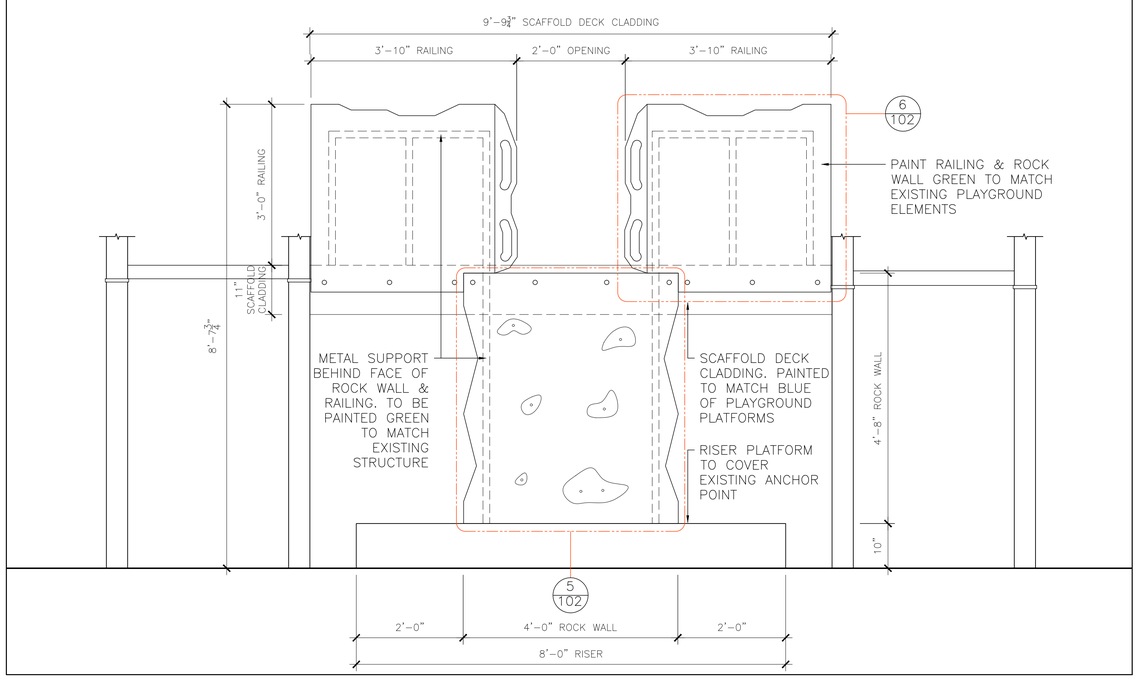

2 102 PLAYGROUND BUILD ELEVATION
SCALE: 3/4" = 1'-0"

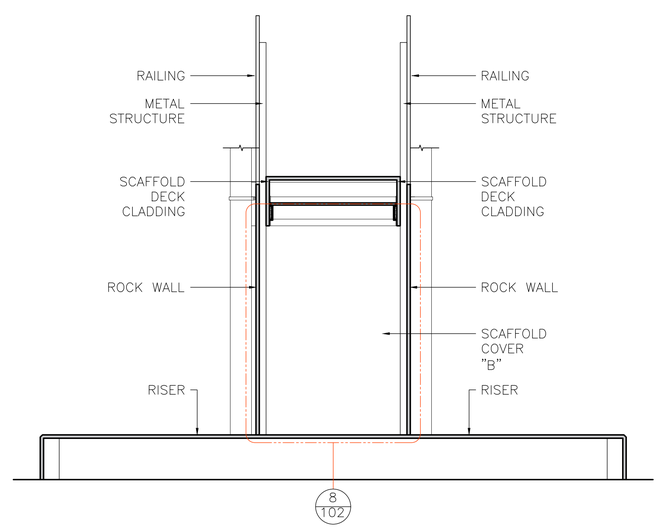

4 102 PLAYGROUND BUILD SECTION
SCALE: 3/4" = 1'-0"

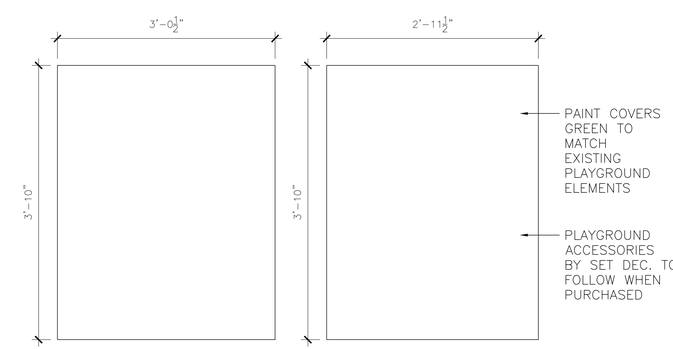

7 102 SCAFFOLD COVER A DETAIL
SCALE: 1" = 1'-0"

8 102 SCAFFOLD COVER B DETAIL
SCALE: 1" = 1'-0"

ISSUED
SEP 23/22

ORPHAN BLACK: *ECHOES*	ORPHAN BLACK SPINOFF PRODUCTIONS LTD. 2480 STANFIELD RD. MISSISSAUGA, ON, L5Y1S2 T: 647.699.8010	Production Designer: AIDAN LEROUX	Set name: EXT. PLAYGROUND	Date: SEP 23, 2022	Scale: AS NOTED	Revised:	Revision no.:	Set no.: 0316	Sheet no.: 102
		Art Director: ALDER DUNLAP	Location address: 1495 SANDALWOOD PKWY. E, BRAMPTON, ON	Drawn by: ES	Sheet name: PLAYGROUND BUILD PLAN & ELEVATIONS				